PRIMERGY MS380

Pedestal Type

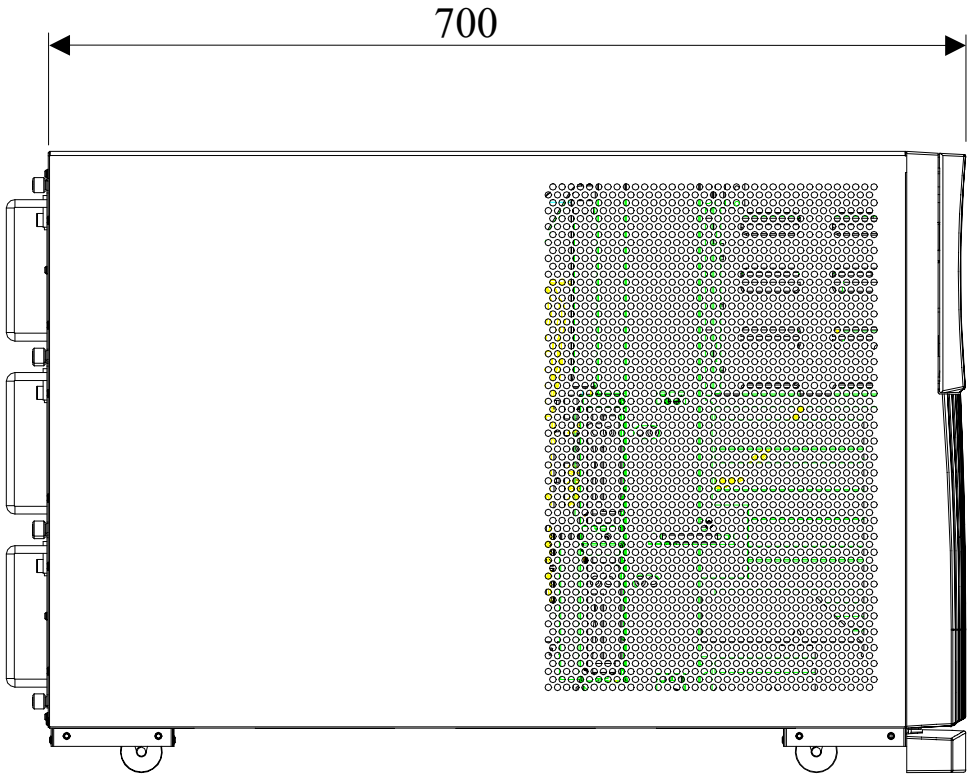

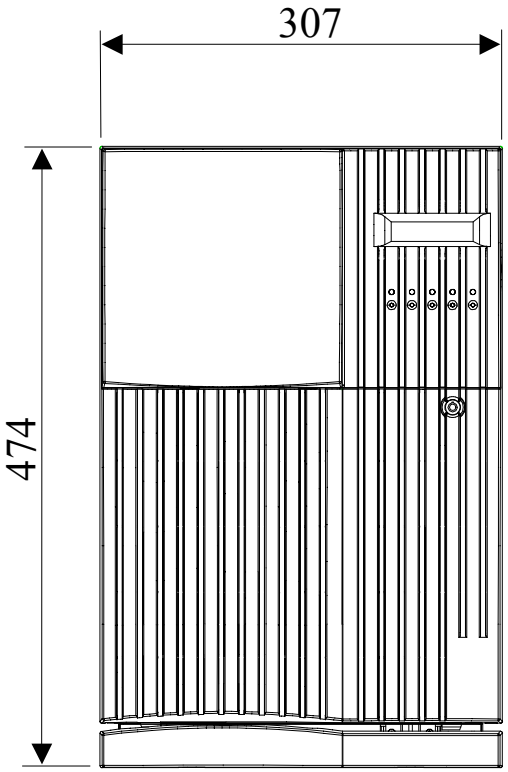

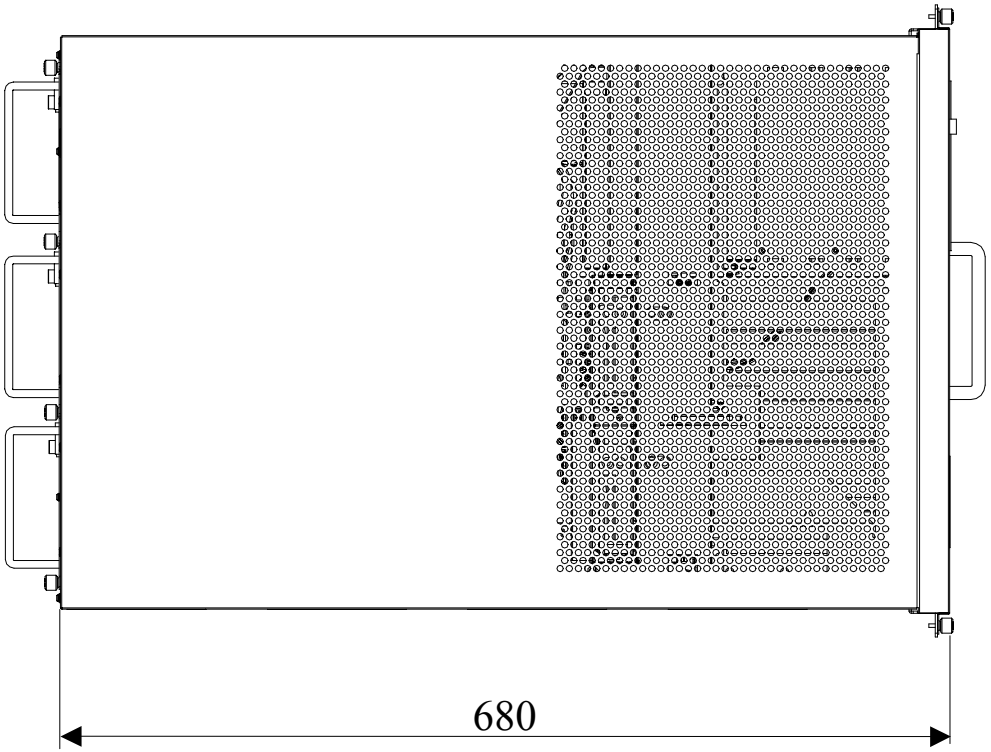

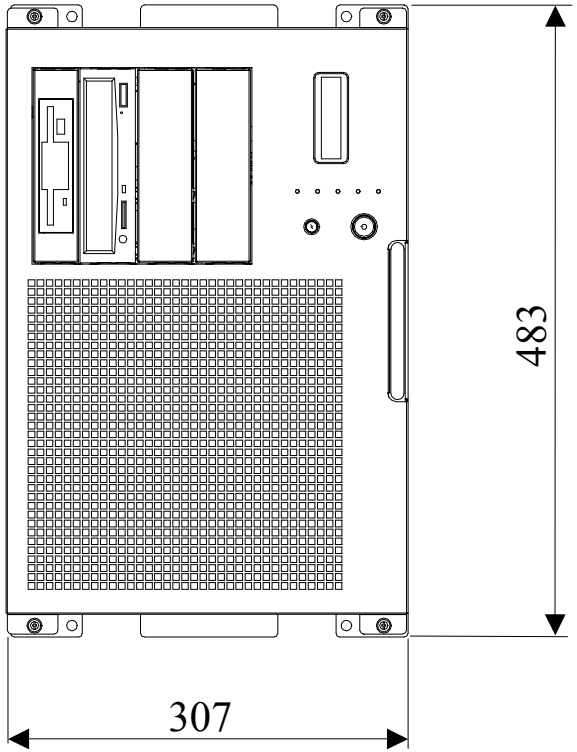

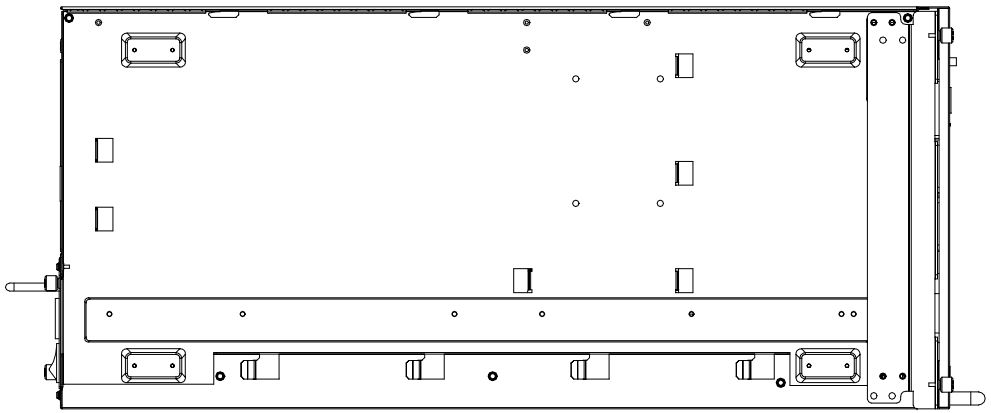

PRIMERGY MS380

Rack Mount Type

PRIMERGY MS380

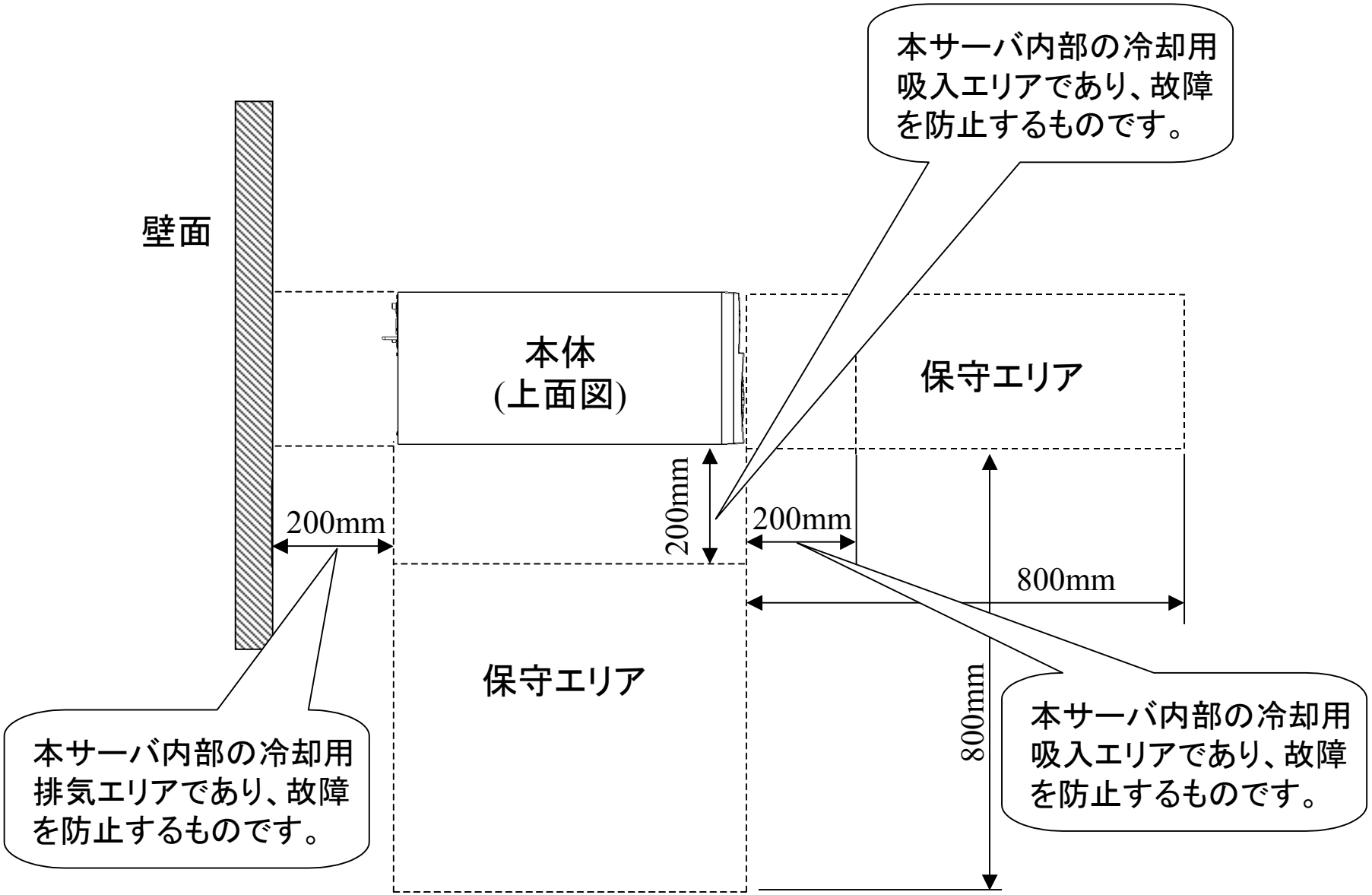

PRIMERGY MS610
Pedestal Type

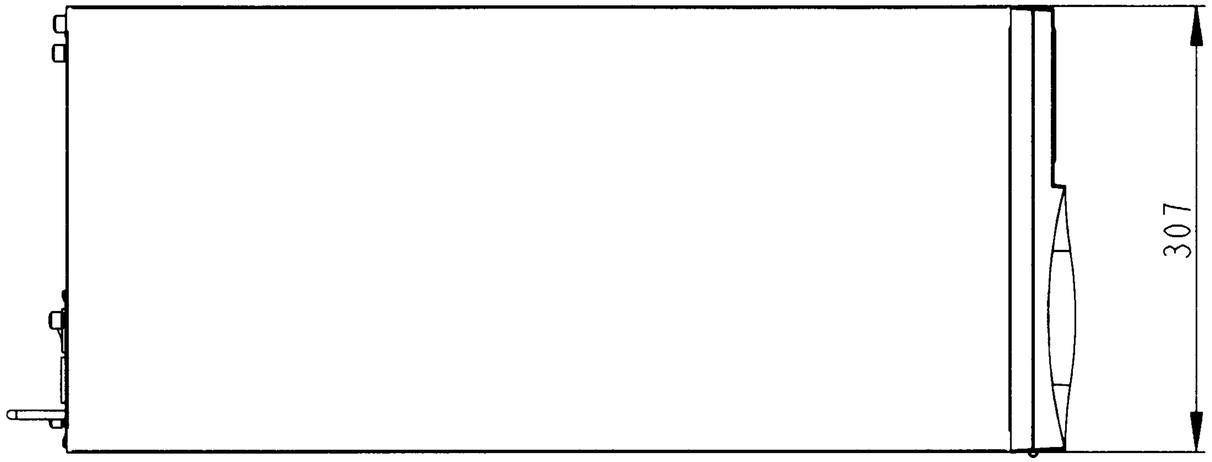

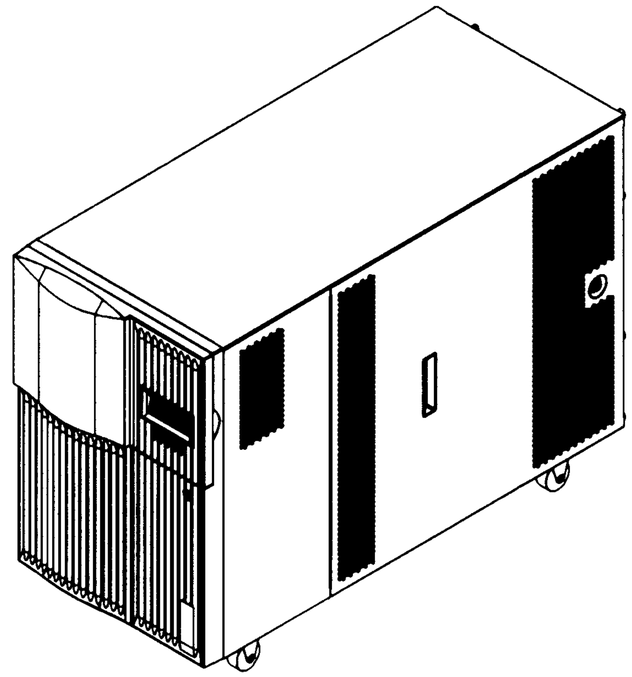

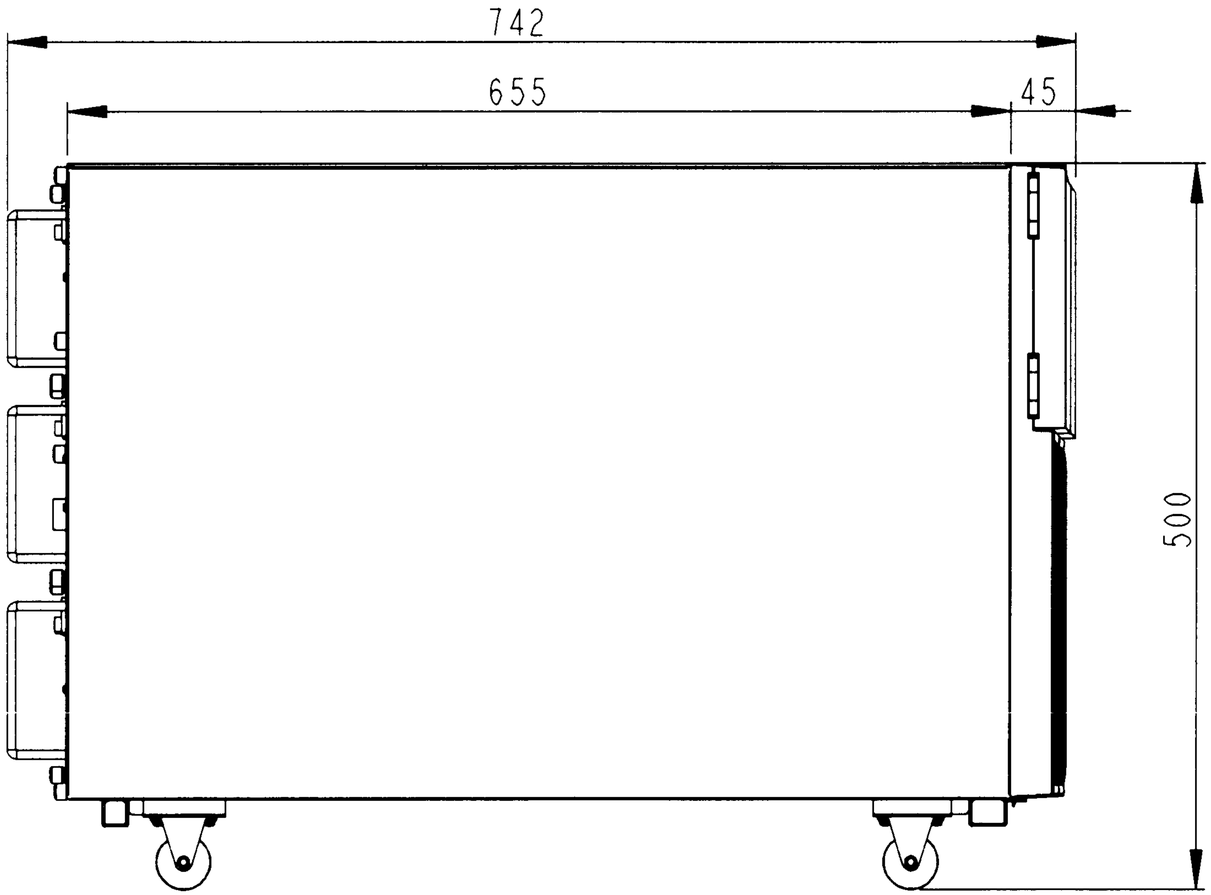

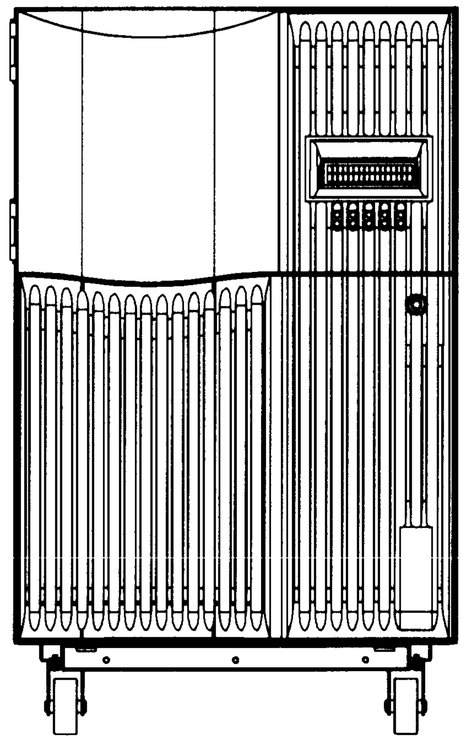

PRIMERGY MS610
Rack Mount Type

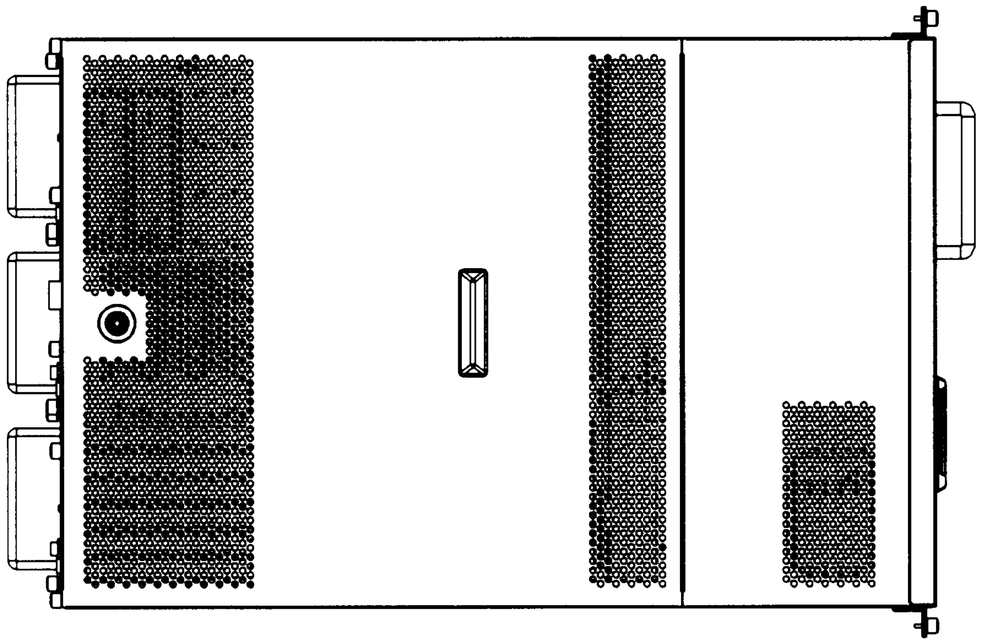

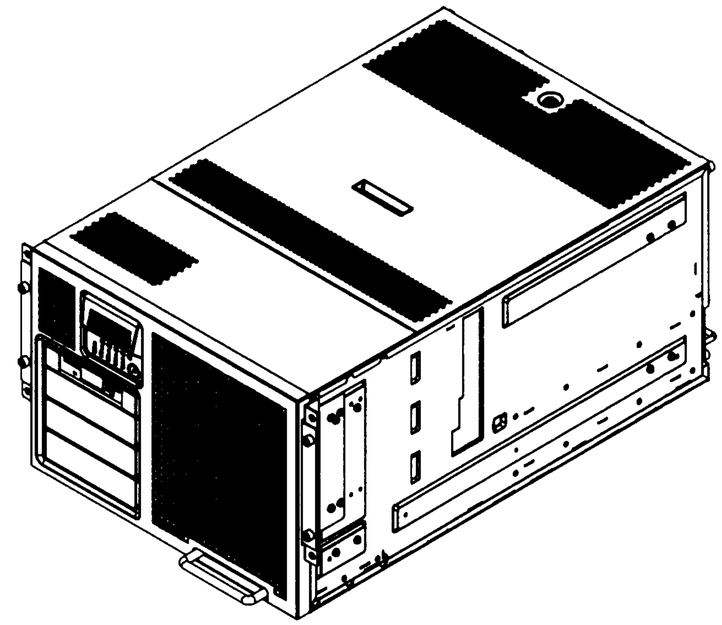

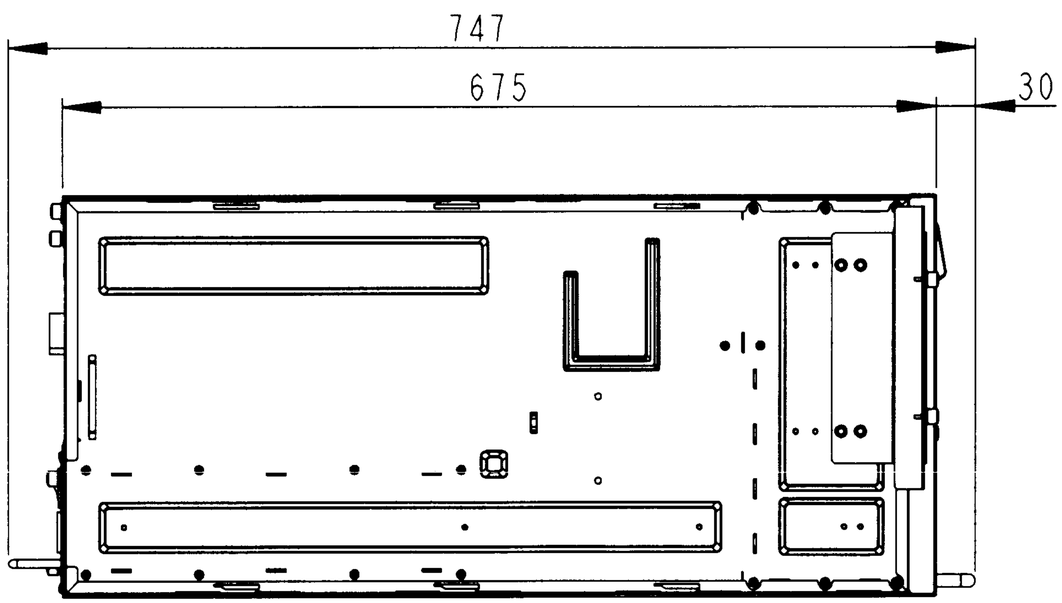

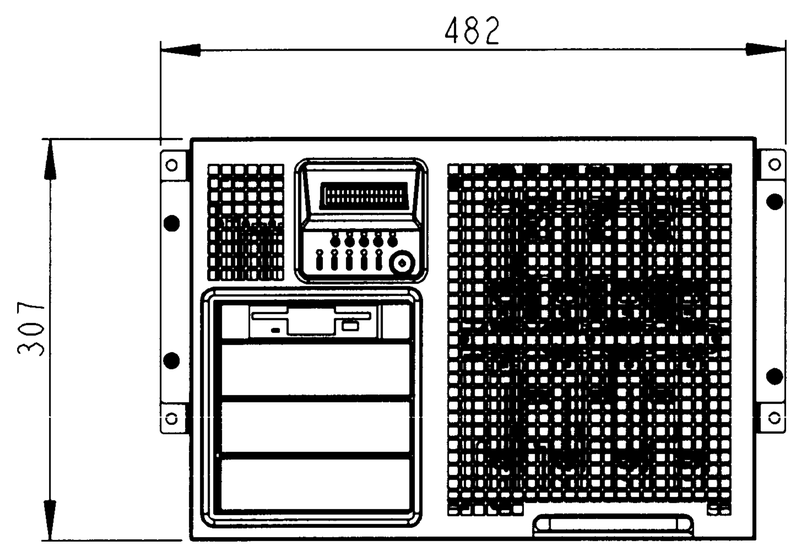
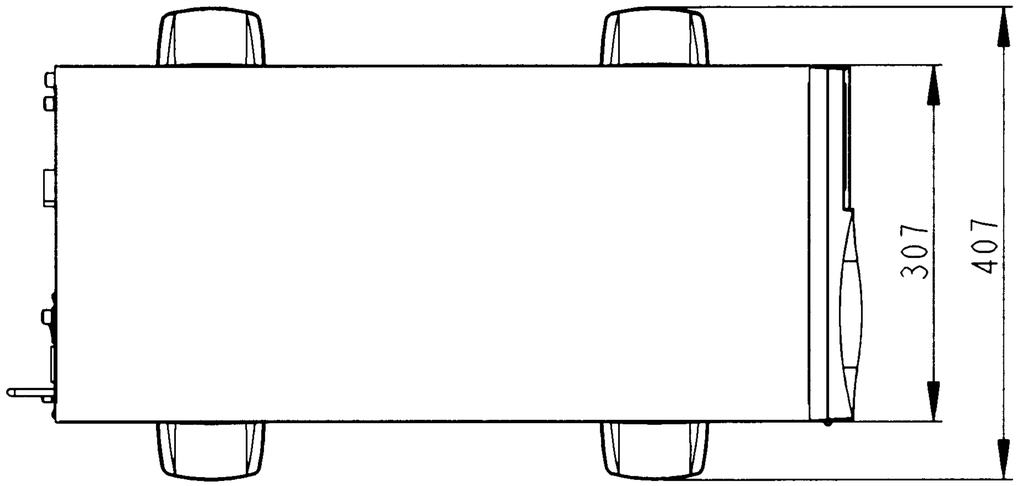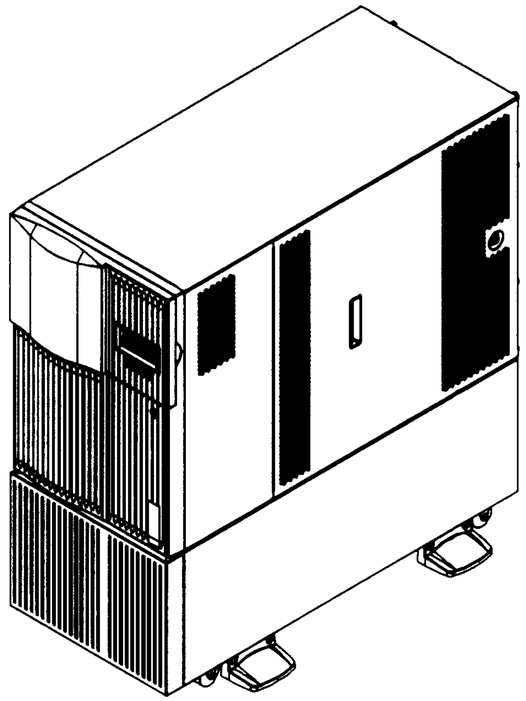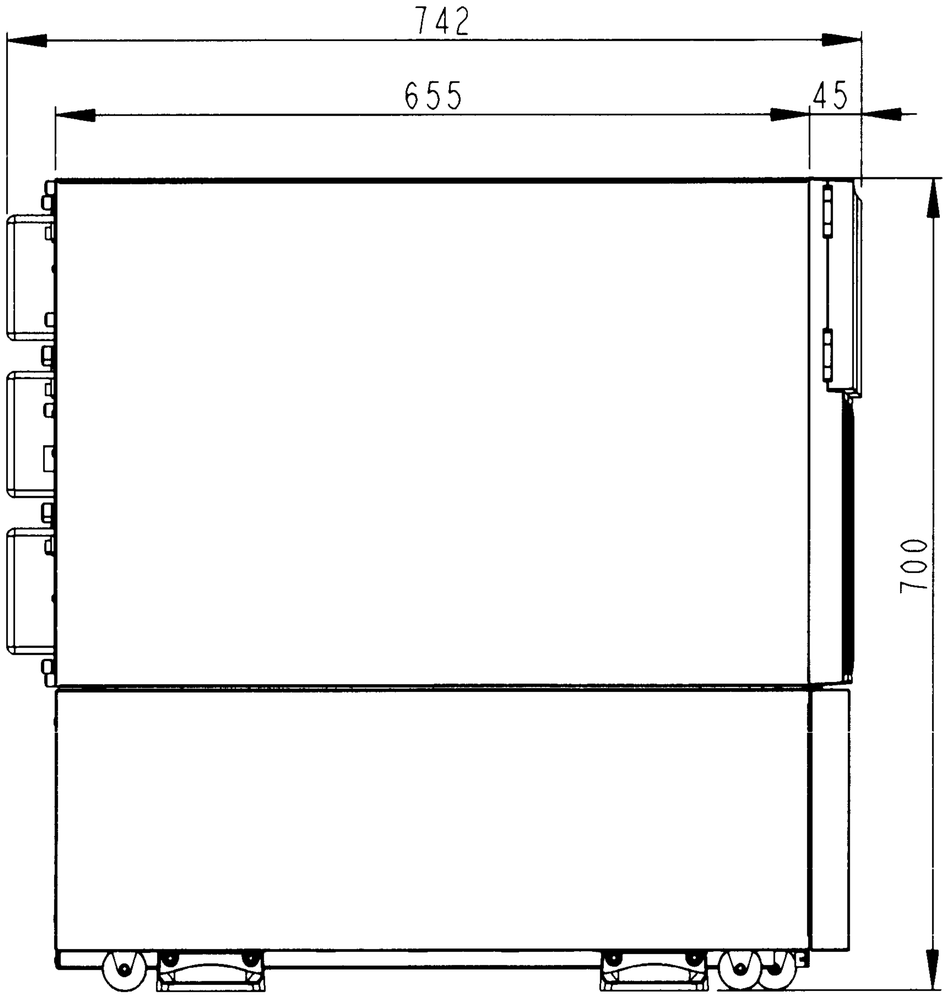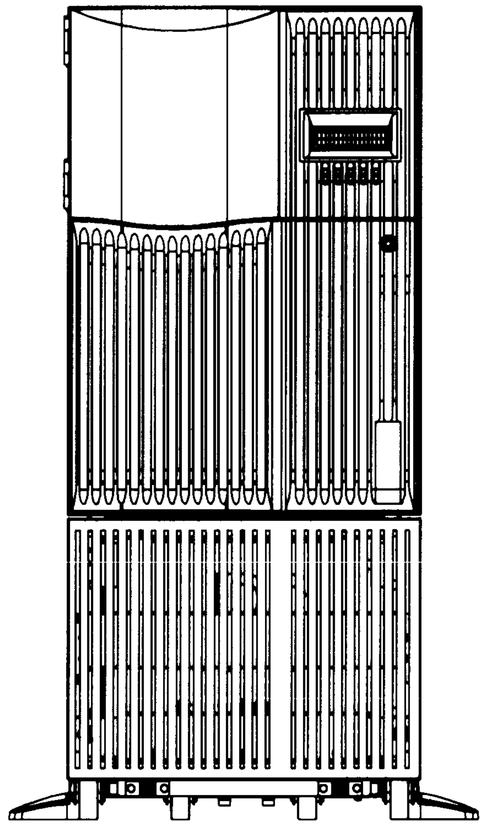
PRIMERGY MS610
(UPSアクセサリボックス付)